SRAC

Ac input pulse direction drive

SRAC series ac stepper motor drives are based on current PID control algorithm design cost-effective segment type drive, is a compact, powerful digital stepper motor drives.And can be used to drive the ac power input, compared with traditional dc power input type of drive, has excellenthigh-speed characteristics;Large torque output;Low noise;Low vibration, etc.Each drive has a variety of parameter setting, through dial switch or rotary switch can quickly set the required parameters.

- Advanced Current Control
- Anti–Resonance
- Torque Ripple Smoothing
- Microstep Emulation
- Optional ac input voltage of 120 v / 220 v switch

CE RoHS Compliant

MOONS'
moving in better ways

Features

Anti-Resonance/Electronic Damping

Step motor systems have a natural tendency to resonate at certain speeds. The SRAC drives automatically calculates the system’s natural frequency and applies damping to the control algorithm. This greatly improves midrange stability, allows for higher speeds, greater torque utilization and also improves settling times.

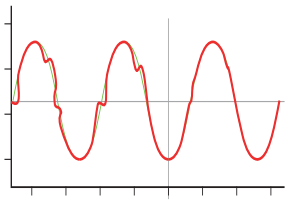

Delivers better motor performance and higher speeds

Microstep Emulation

With Microstep Emulation, low resolution systems can still provide smooth motion. The drive can take low-resolution step pulses and create fine resolution micro-step motion.

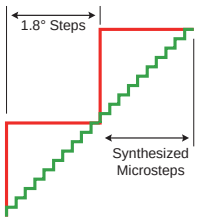

Delivers smoother motion in any application

Torque Ripple Smoothing

All step motors have an inherent low speed torque ripple that can affect the motion of the motor. By analyzing this torque ripple the system can apply a negative harmonic to negate this effect, which gives the motor much smoother motion at low speed.

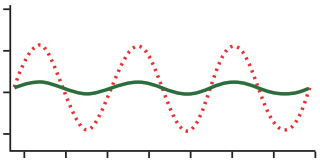

Delivers smoother motion at lower speeds

Command Signal Smoothing

Command Signal smoothing can soften the effect of immediate changes in velocity and direction, making the motion of the motor less jerky. An added advantage is that it can reduce the wear on mechanical components.

Improves overall system performance

Self Test & Auto Setup

At start-up the drive measures motor parameters, including the resistance and inductance, then uses this information to optimize the system performance.

General specification	
Speed Range	Up to 3000 rpm
Operating Temperature	0 - 40°C
Vibration Resistance	5.9m/s² maximum
Storage Temperature	-10 - 70°C
Heat Sinking Method	Natural cooling or fan-forced cooling
Atmosphere	Avoid dust, oily mist and corrosive air
Mass	SRAC2: Approx. 0.8kg
	SRAC4/8: Approx. 1.2kg
Certification	RoHS， CE (EMC): EN 61800-3:2004， CE(LVD): EN61800-5-1:2007
Features	
Idle Current	Automatic idle current reduction to reduce heat after motor stops moving for 1 second Dip switch selectable, 4 selection 25%,50%,70%,90% for SRAC4/8, 2 selection 50%,90% for SRAC2/3SRAC2
Anti-Resonance	Raises the system-damping ratio to eliminate midrange instability and allow stable operation throughout the speed range of the motor, dip switch selectable load inertia
Control Mode	Dip switch selectable Step&Dir or CW/CCW Pulse(SRAC2/3 SRAC2 need internal jumpers)
Inupt Signal Filter	Digital filters prevent position error from electrical noise on command signals, Dip switch selectable 2MHz or 150KHz
Microstep Emulation	Switch selectable microstep emulation provides smoother, more reliable motion
Motor Database	Rotary switch easily selects from many popular motors
Self Test	Switch selectable automatic self test, while self test, drive will rotate the motor back and forth, two turns in each direction.
Protection	overvoltage, undervoltage, over current, motor automatic detection Open circuit
error output	Optically isolated,30VDC max, 100MA max

Electrical Specifications

SRAC2

Parameter	Min.	Typ.	Max.	Unit
Power Supply	80	-	265	VAC
Output Current (Peak)	0.6	-	2.5	A
Cost current of digital input signal	6	10	15	mA
Step Frequency	2	-	2M	Hz
STEP minimum pulse width	250	-	-	ns
Direct pulse width	80	-	-	us
Low-voltage protection point	-	75*/135*	-	VAC
Over-voltage protection point	-	145*/295*	-	VAC
Input Signal Voltage	4.0	-	28	V
Initialization time	-	-	2.5	S
OUT maximum output current	-	-	100	mA
OUT maximum voltage	-	-	30	V

*Note: When the AC input switch is selected on 115V, under voltage protection point is 75VAC, over voltage protection point is 145VAC. When the input switch is selected on 230V status, under voltage protection point is 135VAC, over voltage protection point is 295VAC.

3SRAC2

Parameter	Min.	Typ.	Max.	Unit
Power Supply	80	-	265	VAC
Output Current (Peak)	0.6	-	2.5	A
Cost current of digital input signal	6	10	15	mA
Step Frequency	2	-	2M	Hz
STEP minimum pulse width	250	-	-	ns
Direct pulse width	80	-	-	us
Low-voltage protection point	-	75*/135*	-	VAC
Over-voltage protection point	-	145*/295*	-	VAC
Input Signal Voltage	4.0	-	28	V
Initialization time	-	-	2.5	S
OUT maximum output current	-	-	100	mA
OUT maximum voltage	-	-	30	V

Note: When the AC input switch is selected on 115V, under voltage protection point is 75VAC, over voltage protection point is 145VAC. When the input switch is selected on 230V status, under voltage

SRAC4

Parameter	Min.	Typ.	Max.	Unit
Power Supply	80	-	265	VAC
Output Current (Peak)	0.4	-	4	A
Cost current of digital input signal	6	10	15	mA
Step Frequency	2	-	2M	Hz
STEP minimum pulse width	250	-	-	ns
Direct pulse width	80	-	-	us
Under Voltage Protection	-	80	-	VAC
Over-voltage protection point	-	295	-	VAC
Input Signal Voltage	4.0	-	28	V
Initialization time	-	-	2.5	S
OUT maximum output current	-	-	100	mA
OUT maximum voltage	-	-	30	V

Specification

Electrical Specifications

SRAC8

Parameter	Min	Typ	Max	Units
Power Supply	80	-	265	VAC
Output Current (Peak)	0.4	-	8	Amps
Cost current of digital input signal	6	10	15	mA
Step Signal Frequency	2	-	2M	Hz
STEP minimum pulse width	250	-	-	ns
Direct pulse width	80	-	-	us
Under Voltage Protection	-	80	-	VAC
Over-voltage protection point	-	295	-	VAC
Input signal voltage	4	-	28	V
Initialization time	-	-	2.5	S
OUT maximum output current	-	-	100	mA
OUT maximum voltage	-	-	30	V

3SRAC8

Parameter	Min	Typ	Max	Units
Power Supply	80	-	265	VAC
Output Current (Peak)	0.4	-	8	Amps
Cost current of digital input signal	6	10	15	mA
Step Signal Frequency	2	-	2M	Hz
STEP minimum pulse width	250	-	-	ns
Direct pulse width	80	-	-	us
Under Voltage Protection	-	80	-	VAC
Over-voltage protection point	-	295	-	VAC
Input signal voltage	4	-	28	V
Initialization time	-	-	2.5	S
OUT maximum output current	-	-	100	mA
OUT maximum voltage	-	-	30	V

Input/Output

Pulse & Direction Input

SRAC drive has two high-speed input port STEP and DIR, photoelectric isolation, can accept 5-24 VDC single-ended or differential signal, the highest voltage up to 28 v, falling edge signal effectively.Signal input port has a high speed digital filter, filter frequency of 2 MHZ or 150 KHZ, dial the code switch is optional.

Falling edge to the pulse signal is effective.

Motor running direction depends on the DIR level signal, when the DIR dangling or for low electricity at ordinary times, motor clockwise;Counterclockwise DIR signal for high electricity at ordinary times, motor running.

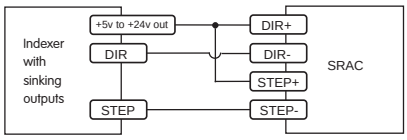

Connecting to indexer with sinking outputs

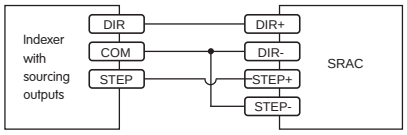

Connecting to indexer with sourcing outputs

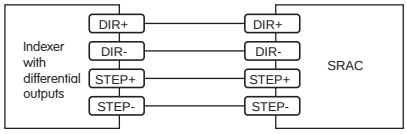

Connecting to indexer with differential outputs

EN Input

The EN input enables or disables the drive amplifier. When EN input is ON the drive amplifier is deactivated. All the MOSFETs will shut down, and the motor will be free. When EN input is OFF, the drive is activated.

A falling signal into the EN input will reset the error status and activate the drive amplifier again.

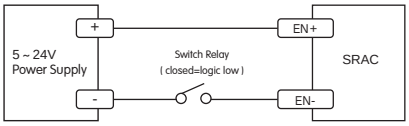

Connecting the input to a switch or relay

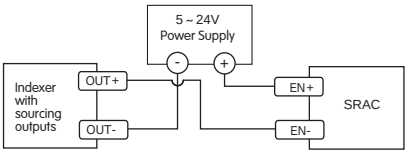

Connecting the input to sinking outputs

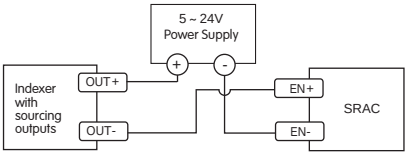

Connecting the input to sourcing outputs

FAULT Output

FAULT Output is optically isolated. The maximum

collector current is 100mA, and the maximum collector to

emitter voltage is 30 volts. The output can be wired to sink or

source current.

When drive is working normally, the output is open.

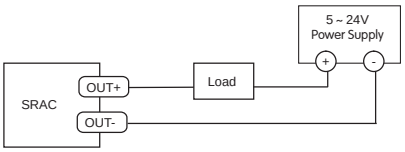

Connecting a sinking output

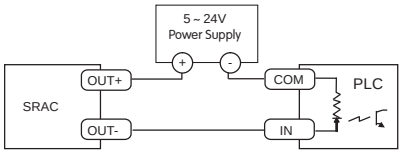

Connecting PLC souring output

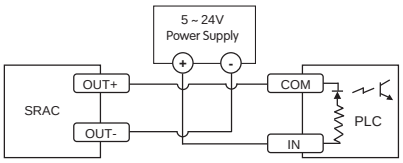

Connecting PLC souring output

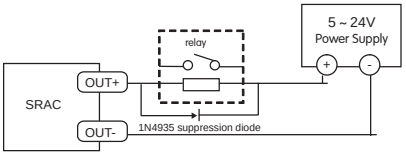

Driving a relay

SRAC2	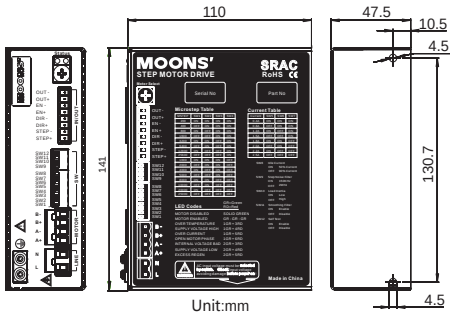	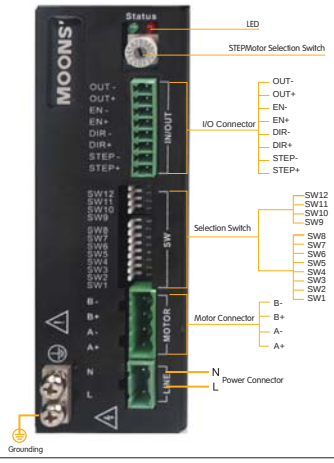
SRAC4/8	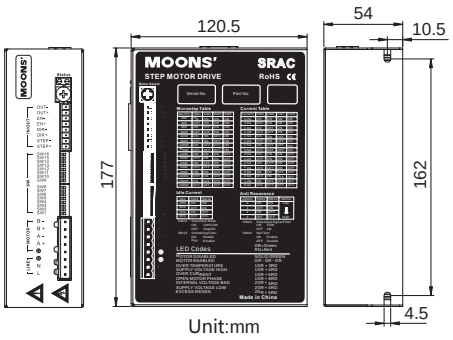	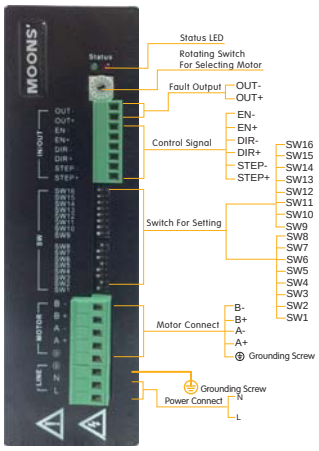
3SRAC2	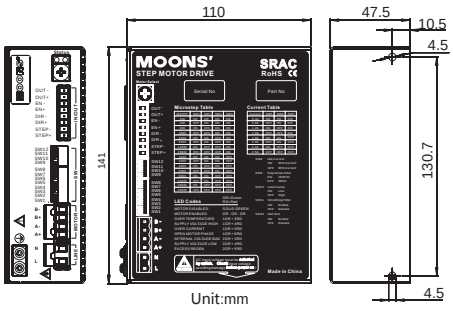	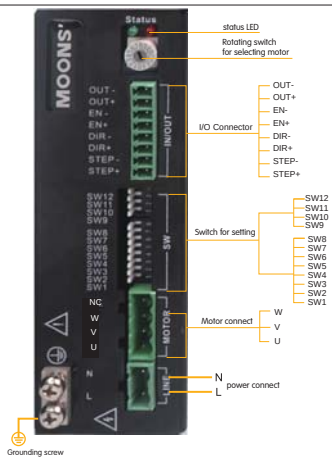
3SRAC8	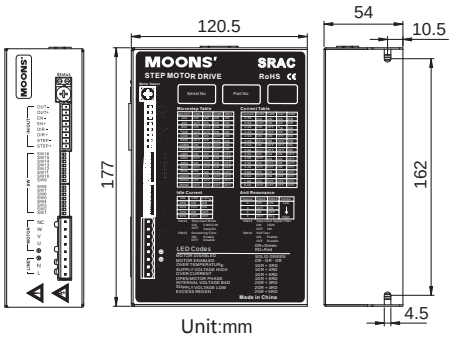	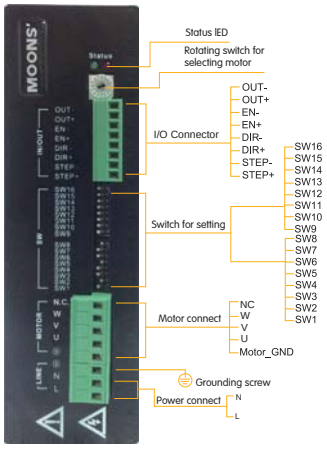

Matching Motor

Matching Driver		Model	Shaft	Step Angle	Leads	Length	Holding Torque	Current		Resistance		Rotor Inertia	Motor Mass	Dielectric Strength
						Mm	N·m	Series	Parallel	Series	Parallel	G·cm^2	Kg	
2 Phase Driver	SRAC2	AM23HS2459-01	Single Shaft	1.8°	4	54	1.1	1	-	16.6	-	260	0.6	1500VAC 1 minute
		AM23HS3466-01	Double Shaft			76	1.8		-	25.4	-	460	1	
		AM24HS5411-01N	Single Shaft			85	2.5		-	15.4	-	900	1.4	
	SRAC4 / SRAC8	AM34HD0802-01	Single Shaft		8	66.5	3	1.8	3.6	3.4	0.9	1100	1.6	
		AM34HD0802-02	Double Shaft											
		AM34HD4802-01	Single Shaft			75	3.5			3.6	0.9	1350	1.9	
		AM34HD1802-01	Single Shaft			96	5			3.6	0.9	1850	2.7	
		AM34HD1802-03	Double Shaft											
		AM34HD6801-01	Single Shaft			115	6.5			4	1	2400	3.5	
		AM34HD2805-01	Single Shaft			125.5	7.1			4.2	1	2750	3.8	
		AM34HD2805-03	Double Shaft											
3 Phase Driver	3SRAC2 / 3SRAC8	AM34HC0306-01	Single Shaft	1.2°	3	66.5	2.5	1.5	-	12.8	-	1100	1.6	
		AM34HC1306-01	Single Shaft			96	5	2.5	-	7	-	1850	2.7	
		AM34HC2307-01	Single Shaft			125.5	5.5	2	-	6	-	2750	3.8	

series connection, suggest that the driving voltage 220vac ; parallel connection suggest the driving voltage 110vac

Torque Curves

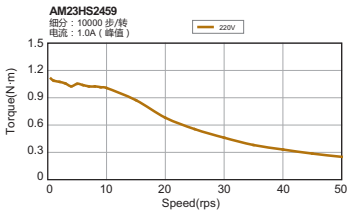

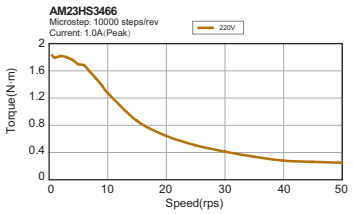

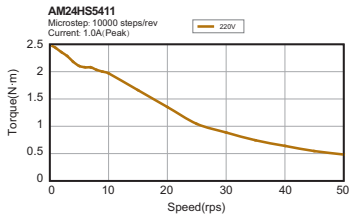

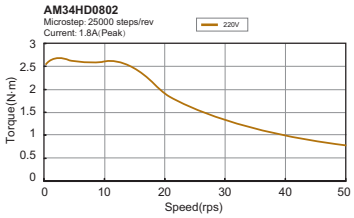

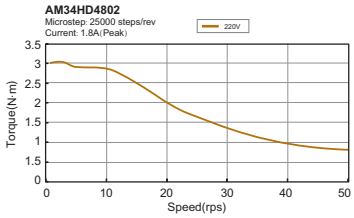

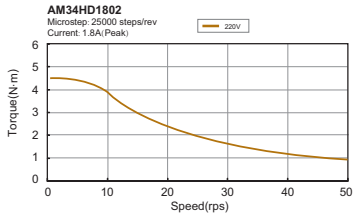

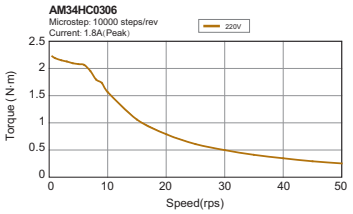

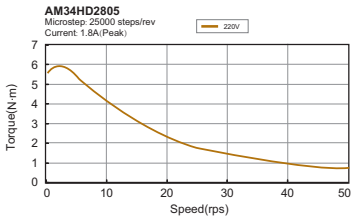

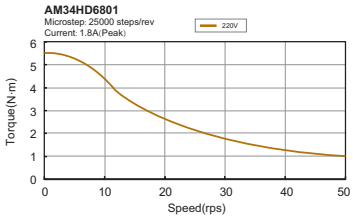

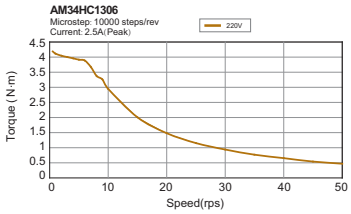

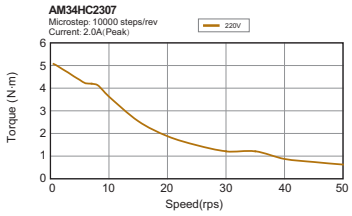

system configuration

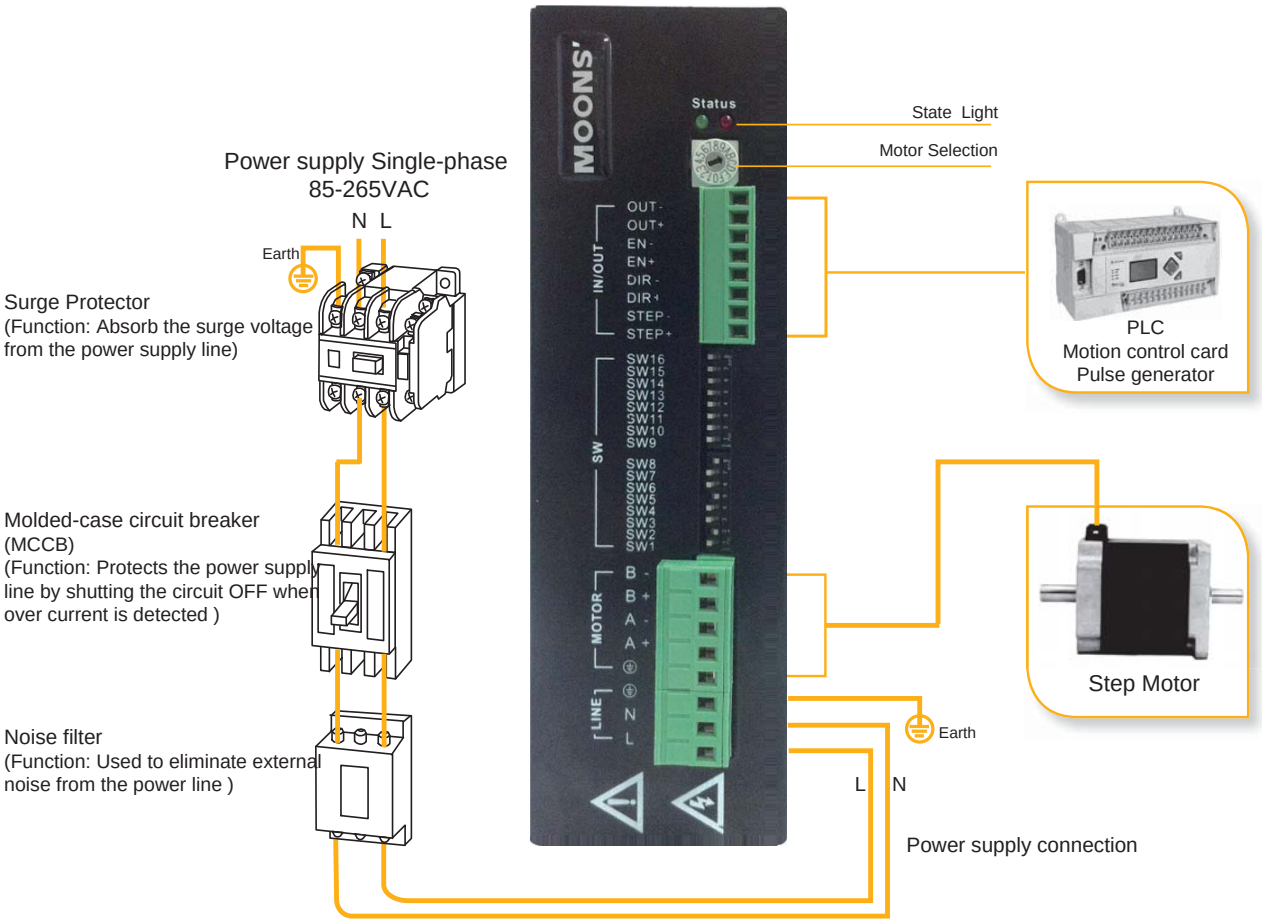

Naming rules

SRAC - 2

Series Number

Current
2=2.5A maximum
4=4.0A maximum
8=8.0A maximum

ordering information

Type	Model	Current	Voltage	Selectable Microstep	Selectable Current
2 phase drive	SRAC2	0.6-2.5A	80-265VAC	16 settings	8 settings
	SRAC4	0.4-4.0A	80-265VAC		16 settings
	SRAC8	0.4-8.0A	80-265VAC		16 settings
3 phase driver	3SRAC2	0.6-2.5A	80-265VAC		8 settings
	3SRAC8	0.4-8.0A	80-265VAC		16 settings

Optional accessories

EMF absorption module

When the motor slowdown, it will be like as a generator load kinetic energy into electrical energy. Some of the energy that will be consumed and motor drive. If your application has

High load running at high speed, kinetic energy considerable will be converted into electricity. Linear power supply usually simple with a large capacitor to absorb the energy without the system

Damage. Switching power supply is often off the excess energy back to the drive in an overvoltage condition, damage may be caused by driver. In order to prevent this kind of feeling

The driver side of the port in Regen R+, R- end to increase the use of our company provide the power 50W 40 ohm EMF absorption power resistor.

Note: 40 ohm resistor power below 50 w shall not be used, otherwise the damage resistance is prone to overheating.And Regen drive for high pressure port, the connection device must be broken Electricity, and pay attention to the leakage protection to prevent damage to people and equipment.

Headquarters
SHANGHAI AMP&MOONS' AUTOMATION CI.,LTD.
No. 168 Mingjia Road Industrial Park North
Minhang District Shanghai 201107, P.R. China
Tel: +86(0)21-5263 4688
Fax: +86(0)21-6296 8682
Web: www.moonsindustries.com
E-mail: ama-info@moons.com.cn

Service Center
400-820-9661

MOONS' Industries (America), Inc.
1113 North Prospect Avenue,Itasca, IL 60143 U.S.A.
Tel: 001-630-833-5940
Fax: 001-630-833-5946

MOONS' Industries (Europe) S.r.l.
Via Torri Bianche n.1 20059 Vimercate(MB) Italy
Tel: +39 039 62 60 521
Fax: +39 039 96 31 409

MOONS' Industries (South-East Asia) Pte Ltd.
33 Ubi Avenue 3 #08-23 Vertex Singapore 408868
Tel: +65 6634 1198
Fax: +65 6634 1138

MOONS' Industries Japan 株式会社
Room 601, 6F, Shin Yokohama Koushin Building,
2-12-1, Shin-Yokohama, Kohoku-ku, Yokohama, Kanagawa, 222-0033, Japan
Tel: +81-(0)45-475-5788
Fax: +81-(0)45-475-5787

Shenzhen Branch Office
Room 2209, 22/F, Kerry Center,No. 2008 Renminnan Road
Shenzhen 518001 P. R.China
Tel: +86 (0)755-2547 2080
Fax: +86 (0)755-2547 2081

Beijing Branch Office
Room 816, Block B, China Electronics Plaza,
No. 3 Danling Street Haidian District Beijing,
100080 P.R. China
Tel: +86 (0)10-5875 3312
Fax: +86 (0)10-5875 2279

Qingdao Branch Office
Room 10E, No.73 Wangjiao Mansion, mid. Hongkong
Road Qingdao 266071 P. R.China
Tel: +86 (0)532-8587 9625
Fax: +86 (0)532-8587 9512

Wuhan Branch Office
Room 3001, World Trade Tower, No.686 Jiefang Avenue,
Jianghan District, Wuhan 430022 P.R.China
Tel: +86 (0)27-8544 8742
Fax: +86 (0)27-8544 8355

Cheng Du Branch Office
Room 1917, Western Tower,
No.19, 4th Section of South People Road, Wuhou District, Chengdu 610041 P.R.China
Tel: +86 (0)28-8526 8102
Fax: +86 (0)28-8526 8103

Xi'an Branch Office
Room 1006, Block D, Wangzuo International City,
No,1 Tangyan Road, Xi'an 710065 P. R.China
Tel: +86 (0)29-8187 0400
Fax: +86 (0)29-8187 0340

Ningbo Branch Office
Room 309, Block B, Taifu Plaza,No. 565 Jiangjia Road
Jiangdong District Ningbo, 315040 P.R. China
Tel: +86 (0) 574-8705 2739
Fax: +86 (0) 574-8705 2365

Guangzhou Branch Office
Room 4006, Tower B, China Shine Plaza,
No. 9 Linhe Xi Road, Tianhe District, 510610 P.R. China
Tel: +86 (0)20-38010153
Fax: +86 (0)20-38103661

MOONS'
moving in better ways

CHINA / 1ST PRINT / 05TH / JUNE / 2014

• **The model names, specifications, appearances and other details of products featured in this brochure are subject to change without notice for purposes of improvement. Please check with our sales office to confirm that the stated information is valid before you examine or order any product featured in the brochure.**